M5774S-1	M5778BKR	M4742	D1004	D1005	UM9957F	D1015	D1017
Q1007	Q1008						

f_{VTX} = 144~148 MHz　　f_{UTX} = 430~450 MHz　　RX LINE

f_{VRX} = 100~230 MHz　　f_{URX} = 300~530 MHz　　TX LINE

f_{VLO} = f_{VRX} + f_{IF} MHz　　f_{ULO} = f_{URX} − f_{IF} MHz　　COMMON LINE

f_{IF} = 45.05 MHz

**f_{SRX} = 810~824 MHz　　**f_{SLO} = $2f_{URX}$ MHz

= 849~869 MHz

= 894~999.975 MHz

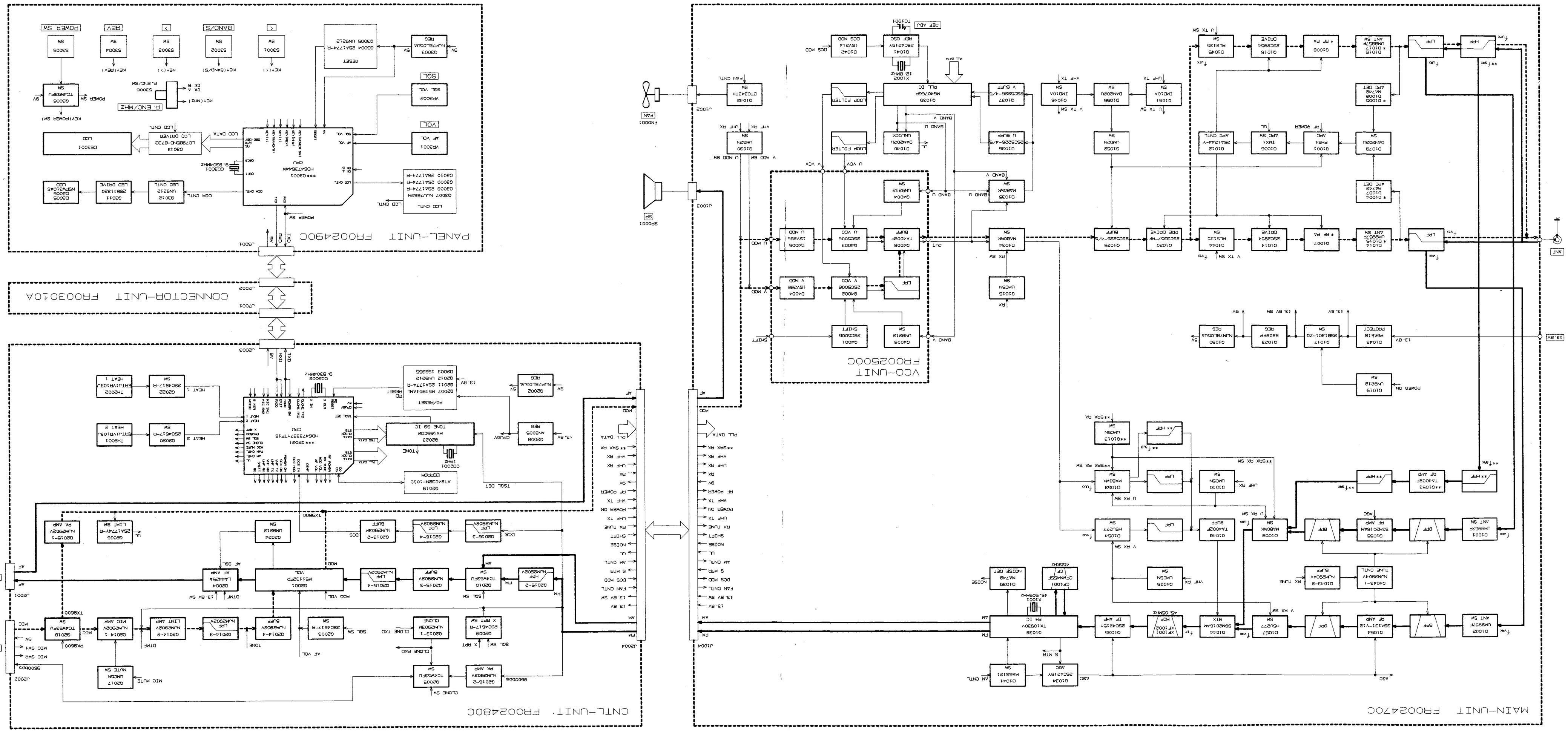

CNTL-UNIT
FR002480F

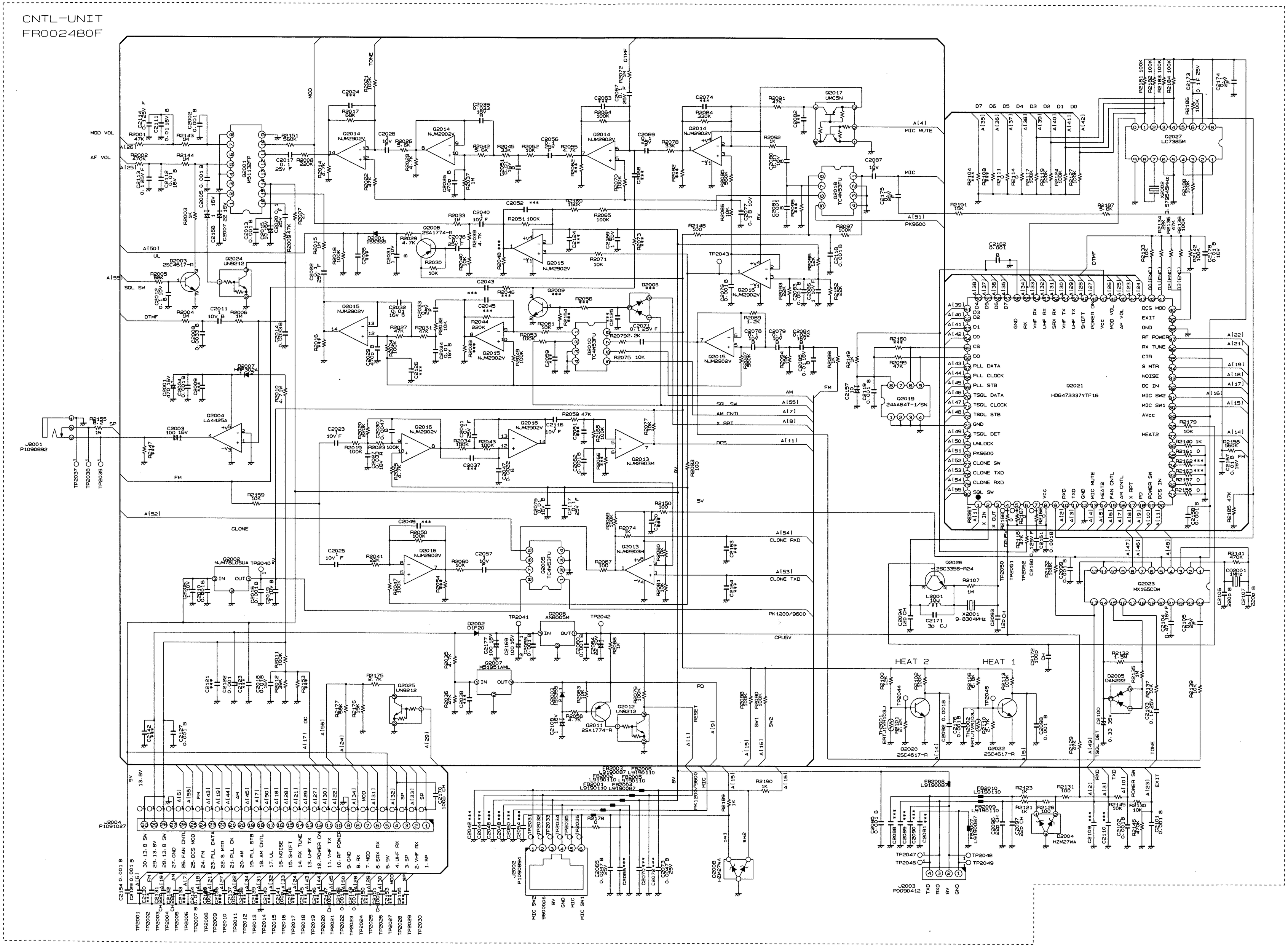

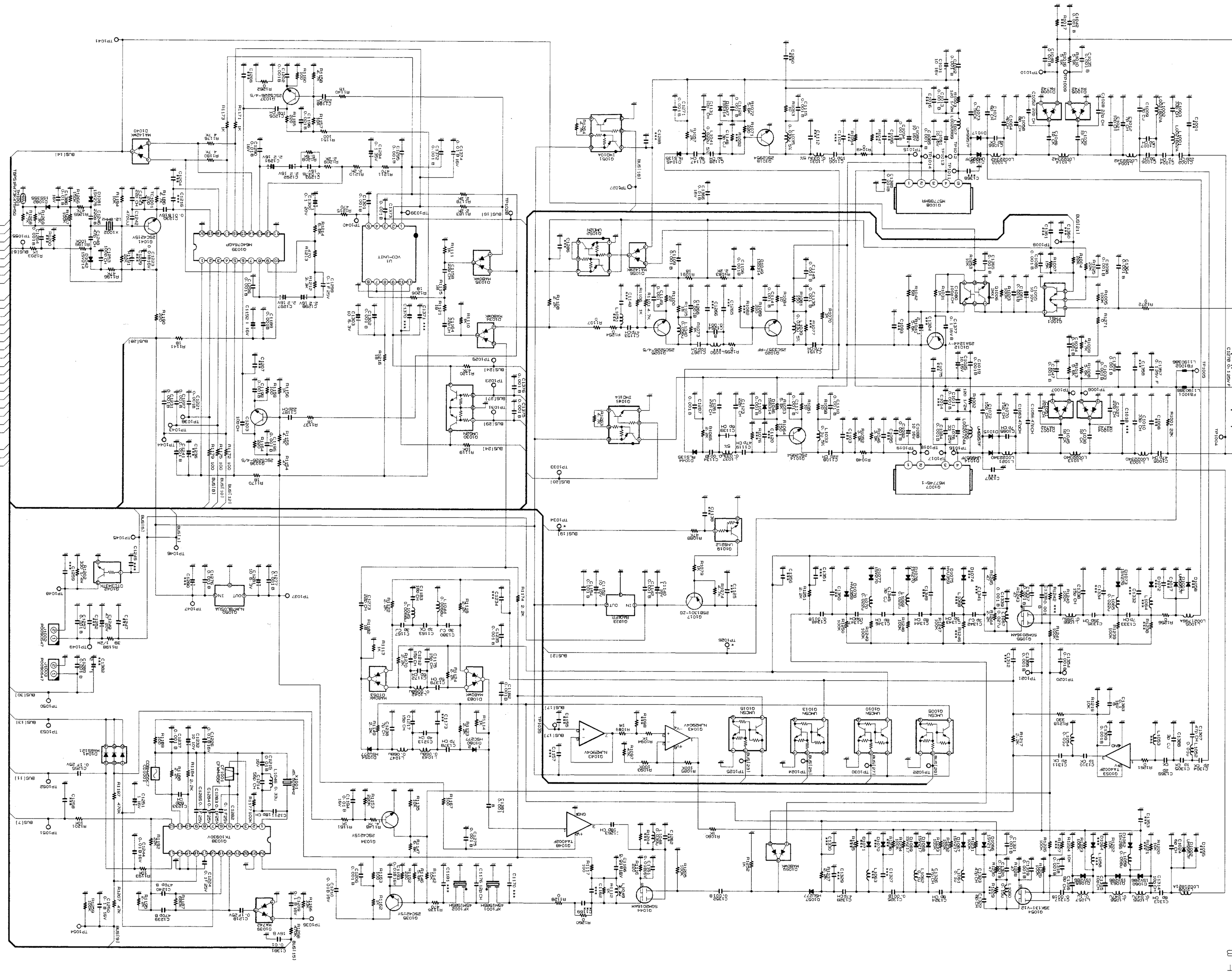

MAIN-UNIT
FR0041208

PANEL-UNIT

FR002490C

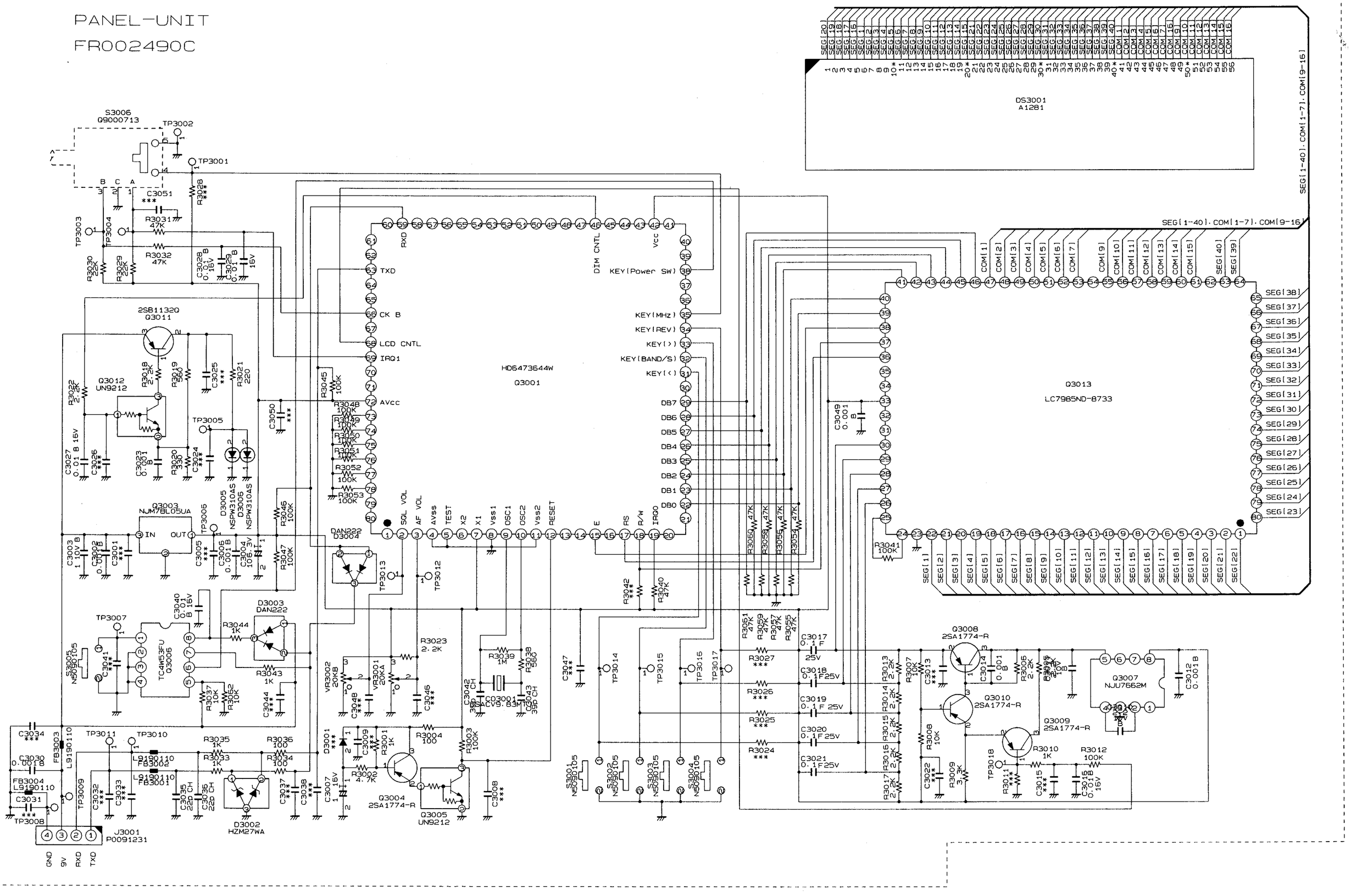
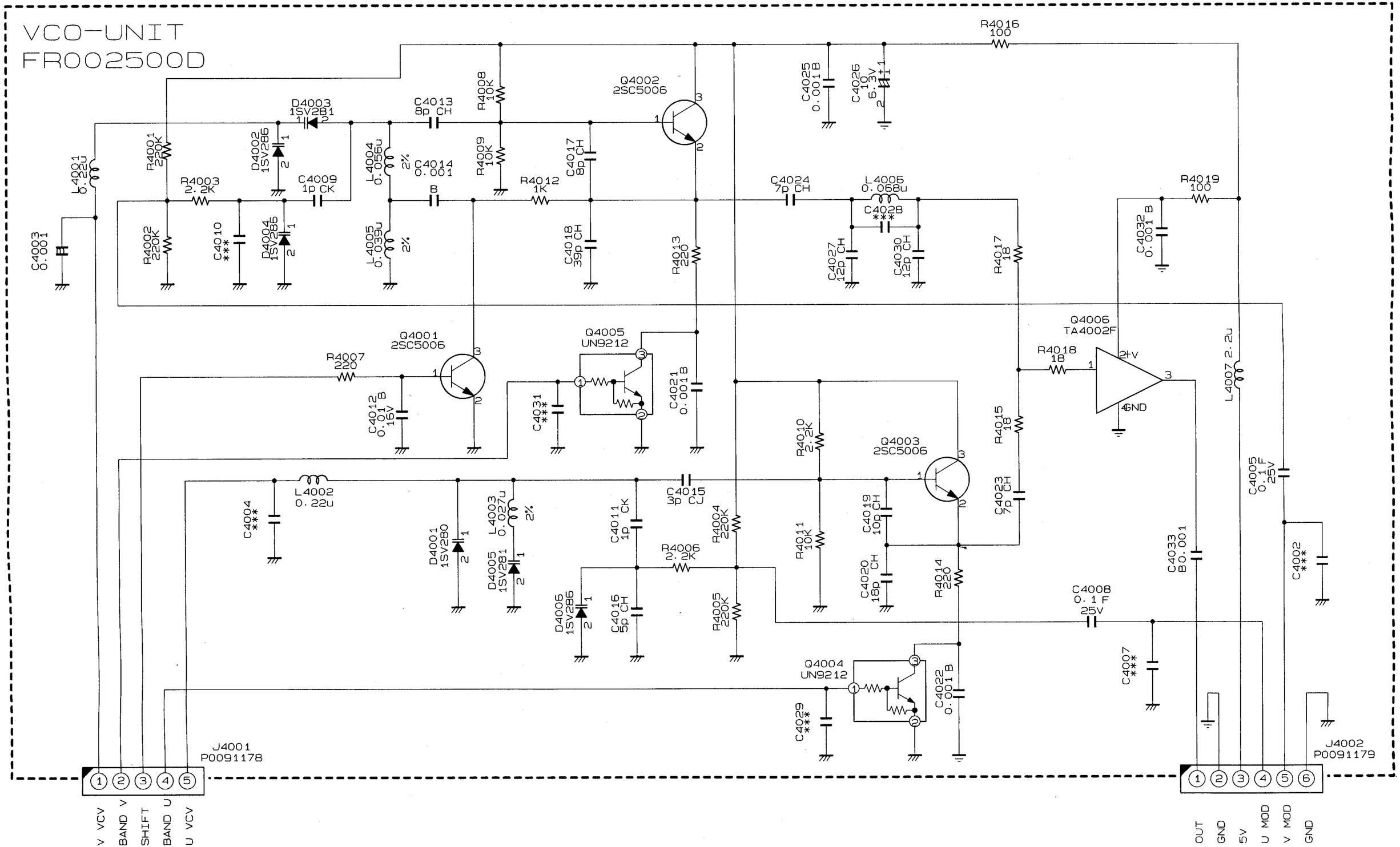
VCO-UNIT
FR002500D